7400

SNOW REMOVAL

Published: 11/05 **S/N B60101810512 – B60101969701 inclusive** Part No. B601-010P

PARTS MANUAL

An Operators Manual with IMPORTANT Safety, Assembly, Operation and Maintenance information was packaged with this Parts Manual during final inspection at the factory. If the Operators Manual is missing at any time, please contact Schulte Industries Ltd. At (306) 287-3715 to receive your free replacement manual.

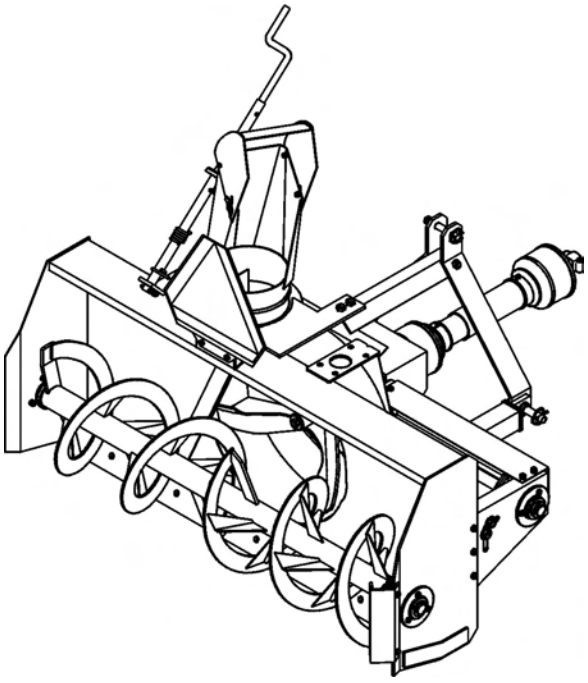

NESSA
www.nessainc.com
73747 130TH ST
ZEARING IA 50276
641-487-7608
INFO@NESSAINC.COM
WWW.NESSAINC.COM

Schulte Industries Ltd.
PO Box 70
Englefeld Saskatchewan
Canada S0K 1N0
Tel. (306) 287-3715
Fax. (306) 287-3355
Parts Fax. (306) 287-4066
Email: info@schulte.ca
Web: www.schulte.ca

¡ATENCIÓN!
LEA EL INSTRUCTIVO

Si No Lee Ingles, Pida Ayuda a Alguien Que Se Lo Lea Para Que le Traduzca Las Medidas de Seguridad

© 2005 Alamo Group

ISO 9001:2000

MEMBER OF THE ALAMO GROUP
ALWAYS ON THE CUTTING EDGE®

Parts Ordering Guide

The following instructions are offered to help eliminate delay and error in processing purchase orders for the equipment in this section.

1. The Purchase Order must include the name and address of the person or organization ordering the parts, who should be charged, and if possible, the serial number of the machine for which the parts were ordered.

2. The Purchase Order must clearly list the quantity of each part, the complete and correct part number, and the description of the part.

3. Schulte Industries Ltd reserves the right to substitute parts where applicable.

4. Schulte Industries Ltd reserves the right to change prices without prior notice.

NOTE: Please refer to the Safety Section in the front of the Operators Manual for the proper Part Number when ordering Replacement Safety Decals. Safety decals are available free of charge from the Schulte Parts Department.

NOTE: If the Operators Manual does not accompany this Parts Manual please obtain one, free of charge from the Schulte Parts Department. DO NOT operate this implement unless you READ, UNDERSTAND, and FOLLOW the Safety and Operation instructions contained in the Operators Manual

NOTE: Please note that the appearance of some parts may vary from the artwork shown in the Manual.

For maximum safety and to guarantee optimum product reliability, always use genuine Schulte Parts. The use of inferior replacement parts may cause premature or catastrophic failure, which could result in serious injury or death.
Direct any questions regarding parts to:

Schulte Industries Ltd ®
P.O. Box 70
Englefeld, Saskatchewan
Canada S0K 1N0
Phone: (306)-287-3715
Parts Fax: (306) 287-4066
Email: info@schulte.ca

SCHULTE®

TABLE OF CONTENTS

7400-6200-Front View....1
7400-6200-Rear View....3
7400-6200-Cross Shaft....5
7400-6200-Manual Chute....7
7400-6200-Three Point Hitch Kit....9
7400-6200-Skid Steer Motor Mount....11
7400-6200-Skid Steer Hydraulic Layout....13
7400-6200-Skid Steer Quick Attach Mount....14
Mounting Kits.....□ 15
7400-6200-Manual Chute Rotator, 543-00....16
7400-6200-Electric Chute Rotator, 97-20....17
7400-6200-Hydraulic Chute Rotator....19
Hydraulic Cylinder, 100-2040....20
Gearbox, 330-410...□ 21
Driveline, 340-4800.□ 23

Part Index.....□ 25

© 2005 Alamo Group Inc.

7400-6200-FRONT VIEW

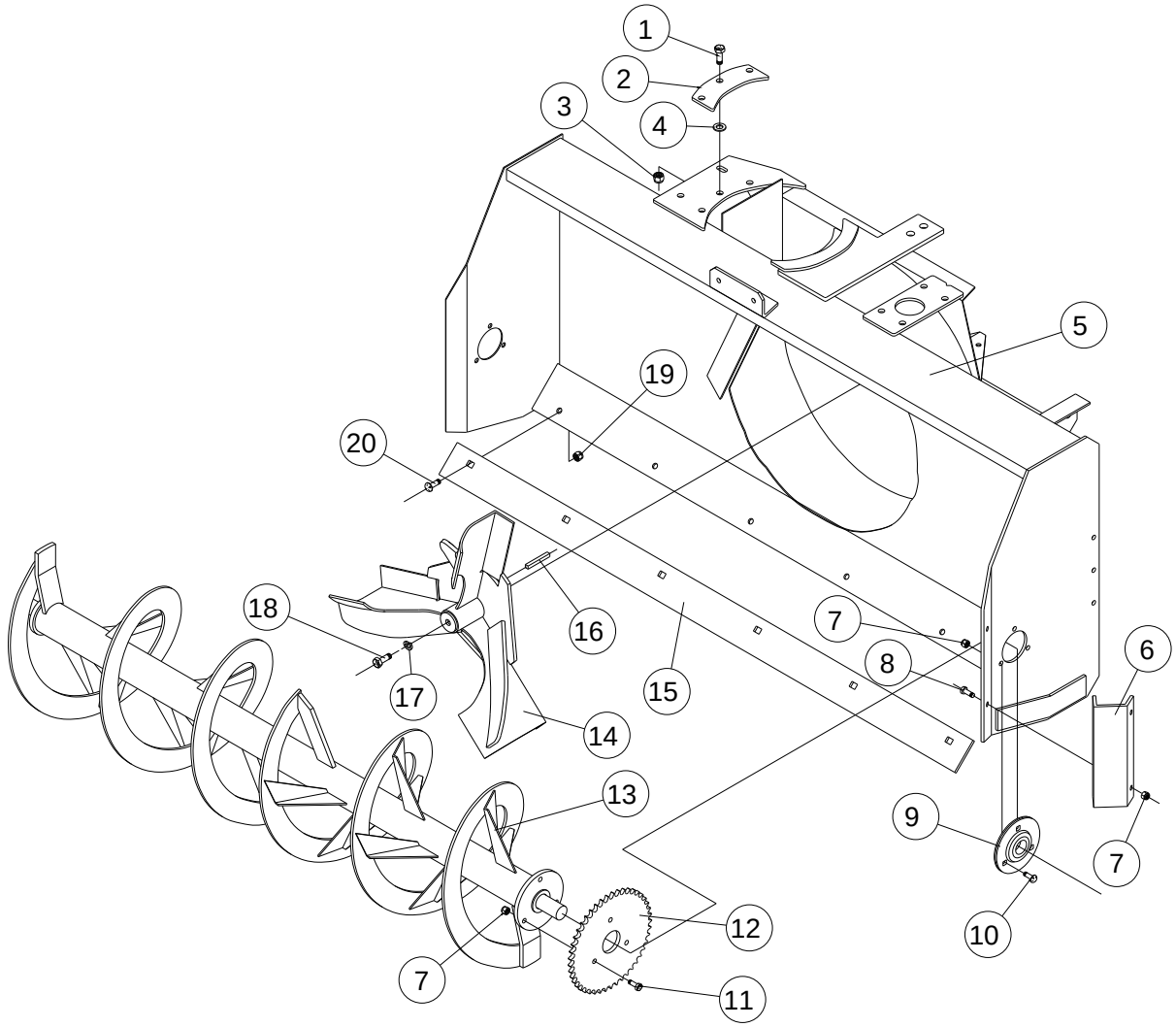

© 2005 Alamo Group Inc.

7400-6200-FRONT VIEW

Ref.	Part No.	Qty	Description
1	250-059	3	Bolt, 1/2" x 1-1/2" UNC
2	590-122	1	Chute retainer plate
3	270-007	3	Locknut, 1/2" UNC
4	256-062	3	Machine bushing, 17/32" x 1" x 16 ga
5	B501-101	1	Main housing, 6200
	B601-101	1	Main housing, 7400
6	B601-115	1	Chain guard
7	270-017	8	Locknut, 3/8" UNC
8	250-018	2	Bolt, 3/8" x 1" UNC
9	352-600	2	Flange bearing, 1-1/4 complete
	353-601	2	Press steel housing, 1-1/4 bearing
10	250-030	6	Carriage bolt, 3/8 x 1 UNC
11	250-019	3	Bolt, 3/8 x 1-1/4 UNC
12	312-509	1	Sprocket, 50A52, 2" bore
13	B501-105	1	Auger, 6200 14" Dia.
	B601-105	1	Auger, 7400 14" Dia.
14	B601-120	1	Fan, 3 paddle, 22"
15	B501-109	1	Blade, 6200
	B601-109	1	Blade, 7400
16	904-011	1	Key, 5/16" x 5/16" x 2-1/2"
17	255-009	1	Lockwasher, 1/2"
18	250-061	1	Bolt, 1/2" x 1-1/4" UNC
19	270-014	7	Locknut, 7/16" UNC
20	250-040	7	Carriage bolt, 7/16" x 1" UNC

© 2005 Alamo Group Inc.

7400-6200-REAR VIEW

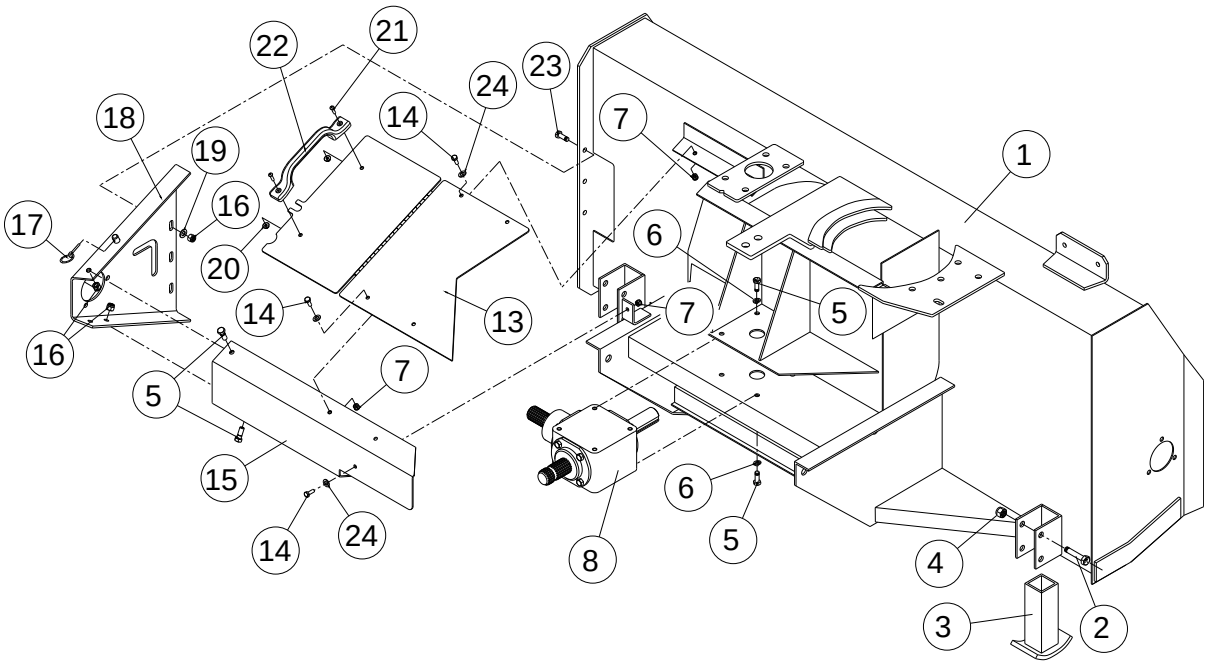

© 2005 Alamo Group Inc.

7400-6200-REAR VIEW

Ref.	Part No.	Qty	Description
1	B501-101	1	Main housing, 6200
	B601-101	1	Main housing, 7400
2	250-0501	4	Bolt, 1/2" x 3-1/4" UNC
3	53-07	2	Skid shoe
4	270-007	4	Locknut, 1/2" UNC
5	250-017	11	Bolt, 3/8" x 3/4" UNC
6	255-013	8	Lockwasher, 3/8"
7	270-020	5	Locknut, 5/16" UNC, 6200
	270-020	7	Locknut, 5/16" UNC, 7400
8	330-410	1	Gear box, Prairie Gear
13	B501-119	1	Chain access panel, 6200
	B601-127	1	Chain access panel, 7400
14	250-006	5	Bolt, 5/16" x 3/4" UNC, 6200
	250-006	7	Bolt, 5/16" x 3/4" UNC, 7400
15	B501-120	1	Cross shaft shield, 6200
	B601-128	1	Cross shaft shield, 7400
16	270-017	6	Locknut, 3/8" UNC
17	300-0120	1	Lynch pin, 3/16"
18	B601-126	1	Drive chain shield
19	256-017	3	Washer, 3/8"
20	257-111	2	Wide flange nut
21	251-151	2	Machine screw, #10
22	280-150	1	Handle
23	250-018	7	Bolt, 3/8" x 1" UNC
24	256-020	5	Washer, 5/16", 6200
	256-020	7	Washer, 5/16", 7400

© 2005 Alamo Group Inc.

7400-6200-CROSS SHAFT

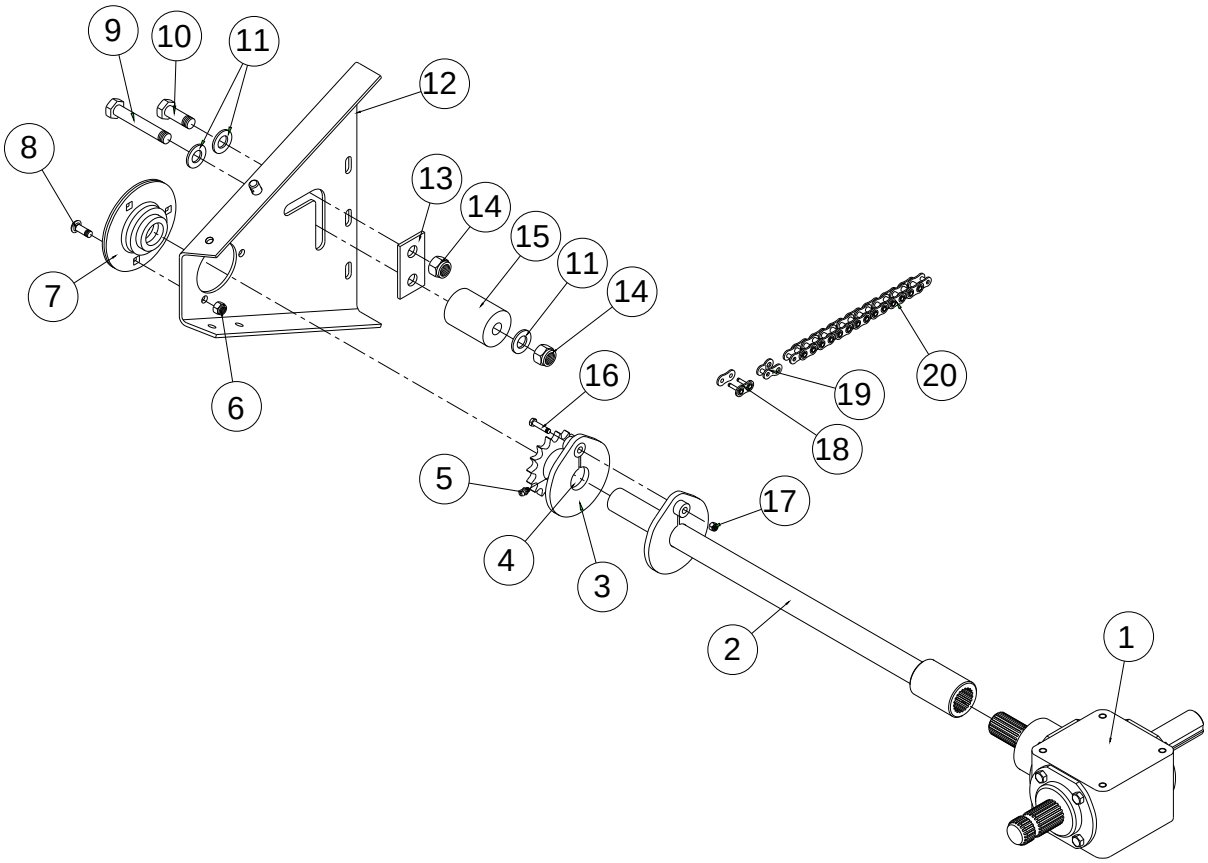

© 2005 Alamo Group Inc.

7400-6200-CROSS SHAFT

Ref.	Part No.	Qty	Description
1	330-410	1	Gear box, Prairie Gear
2	B501-118	1	Cross shaft, 6200
	B601-118	1	Cross shaft, 7400
3	B601-123	1	Shear plate, sprocket c/w bushing
4	363-005	1	Brass bushing, 1-1/4x1-1/2x1-3/4
5	273-006	1	Grease nipple, self tap
6	270-017	3	Locknut, 3/8 UNC`
7	352-600	1	Flange bearing, 1-1/4 complete
	353-601	2	Press steel housing, 1-1/4 bearing
8	250-030	3	Carriage bolt, 3/8 x 1 UNC
9	250-084	1	Bolt, 5/8 x 4-1/2 UNC
10	250-095	1	Bolt, 5/8 x 1-1/2 UNC
11	256-006	3	Flat washer, 5/8
12	B601-126	1	Drive chain shield
13	B601-122	1	Chain tightener plate
14	270-004	2	Locknut, 5/8 UNC
15	313-051	1	Nylon tensioner, 2" OD
16	250-136	1	Shear bolt, 1/4 x 2 UNC GR2
17	270-025	1	Locknut, 1/4" UNC
18	311-501	1	Connector link, #50 complete
19	311-502	2	Offset link, #50 complete
20	310-502	1	Roller chain, #50

© 2005 Alamo Group Inc.

7400-6200-MANUAL CHUTE

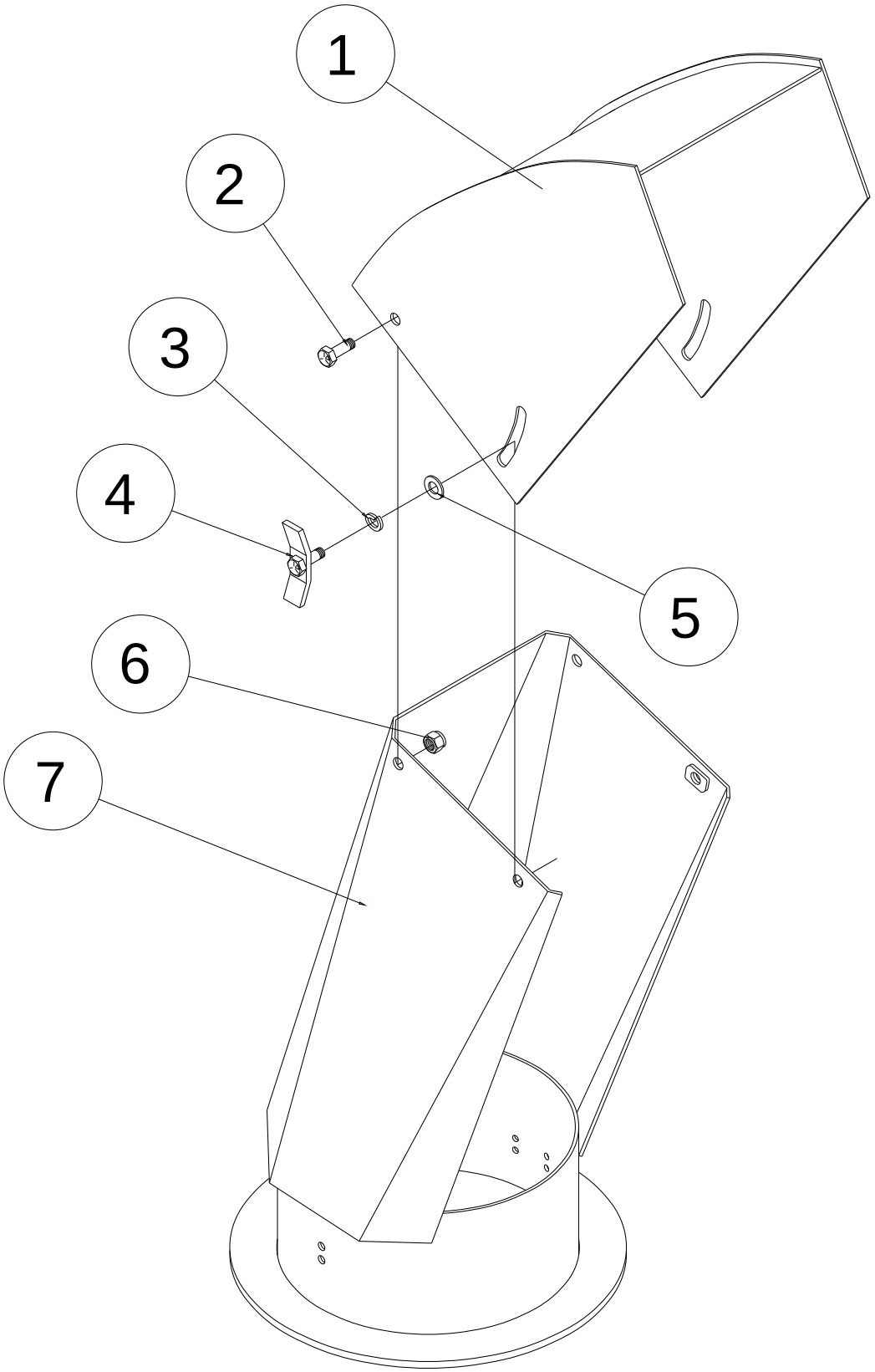

© 2005 Alamo Group Inc.

7400-6200-MANUAL CHUTE

Ref.	Part No.	Qty	Description
1	57-12	1	Deflector
2	250-018	2	Bolt, 3/8" x 1" UNC
3	255-013	2	Lockwasher, 3/8"
4	57-10	2	Wingbolt, 3/8" UNC
5	256-017	2	Washer, 3/8"
6	270-017	2	Locknut, 3/8" UNC
7	28-07	1	Chute

© 2005 Alamo Group Inc.

7400-6200-THREE POINT HITCH KIT

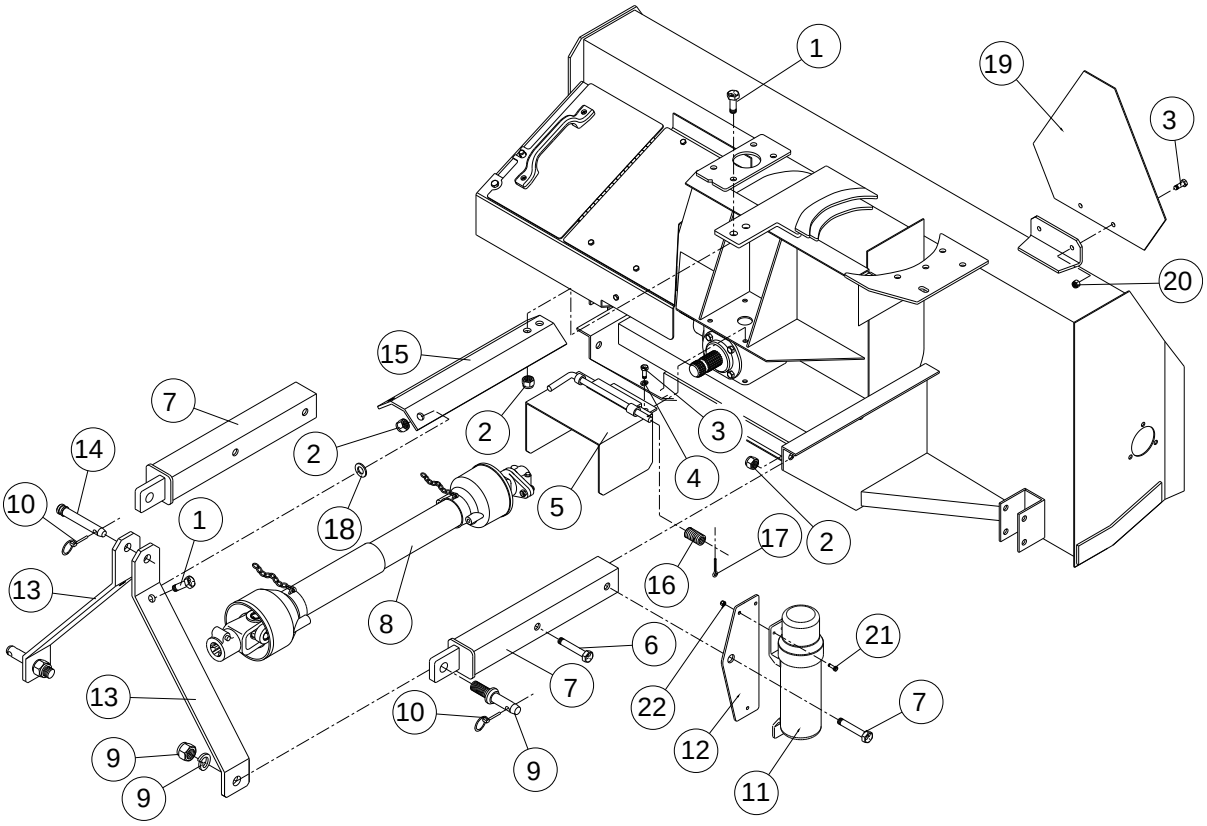

© 2005 Alamo Group Inc.

7400-6200-THREE POINT HITCH KIT

Ref.	Part No.	Qty	Description
1	250-095	4	Bolt, 5/8 x 1-1/2 UNC
2	270-004	8	Locknut, 5/8 UNC
3	250-018	4	Bolt, 3/8 x 1 UNC
4	255-013	2	Lock washer, 3/8
5	B501-115	1	Shield, flip up
6	250-085	4	Bolt, 5/8 x 4 UNC
7	B601-203	2	Lower side arm
8	340-3800	1	U-joint, size 3, fits 6200
	340-4800	1	U-joint, size 4, fits 7400
9	300-015	2	Lift pin, Cat. 1, 7/8 x 1-3/4 UL, incl hardware
10	300-010	3	Lynch pin, 7/16
11	280-201	1	Manual Canister
12	C000-355	1	Mount Plate
13	B601-201	2	Lift arm
14	300-001	1	Top link pin, Cat.
15	B601-202	1	Top arm
16	229-010	1	Compression spring, .08 wire
17	271-008	1	Cotter pin, 1/8 x 1
18	256-006		Washer, 5/8 (Qty is as required)
19	B601-125	1	SMV sign
20	270-017	2	Locknut, 3/8" UNC
21	250-002	3	Bolt, 1/4" x 1" UNC
22	270-025	3	Locknut, 1/4" UNC

© 2005 Alamo Group Inc.

7400-6200-SKID STEER MOTOR MOUNT

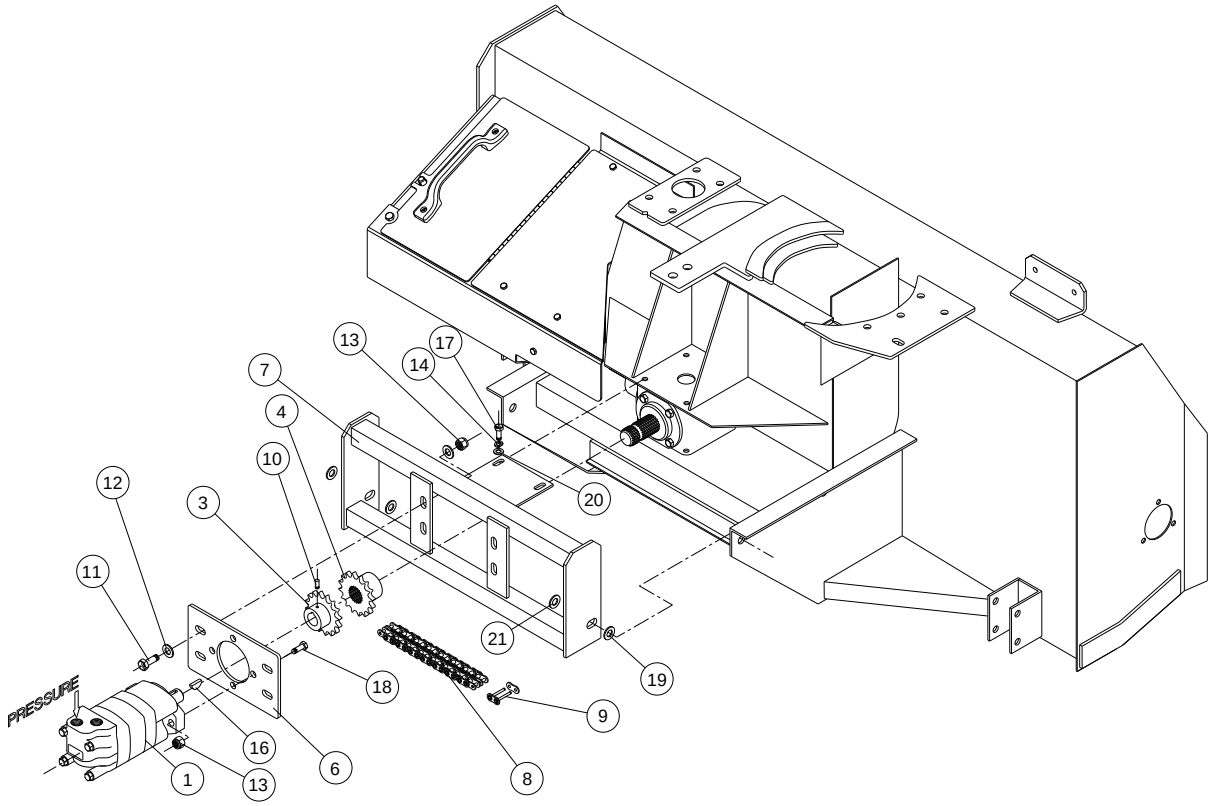

© 2005 Alamo Group Inc.

7400-6200-SKID STEER MOTOR MOUNT

Ref.	Part No.	Qty	Description
1	116-213	1	Char-lynn 'T' series motor, 4.9 cu in.
	116-214	1	Char-lynn T series motor, 6.2 cu in
	116-902	1	Char-lynn 2000 series motor, 8.0 cu in
	116-903	1	Char-lynn 2000 series motor, 9.6 cu in
	116-904	1	Char-lynn 2000 series motor, 11.9 cu in
3	312-504	1	Sprocket 50B16 1" bore, keyed
4	312-506	1	Sprocket 50B16 1" bore 1-3/8-21
6	B601-304	1	Mount plate
7	B601-301	1	Mount assembly
8	310-541	1	Chain, #50 double
9	311-541	1	Connector link, #50 double complete.
10	268-017	2	Set screw, 5/16 x 3/8 Allen. hd.
11	250-059	4	Bolt, 1/2 x 1-1/2 UNC
12	256-011	8	Flat washer, 1/2
13	270-007	6	Lock nut, 1/2 UNC
14	255-013	2	Lock washer, 3/8
16	117-975	1	Woodruff key
17	250-018	2	Bolt, 3/8 x 1
18	250-060	2	Bolt, 1/2 x 1-3/4 UNC
19	256-006	2	Flat washer, 5/8
20	256-017	2	Flat washer, 3/8
21	256-063	2	Machine bushing, 5/8 x 1-1/16

© 2005 Alamo Group Inc.

7400-6200-SKID STEER HYDRAULIC LAYOUT

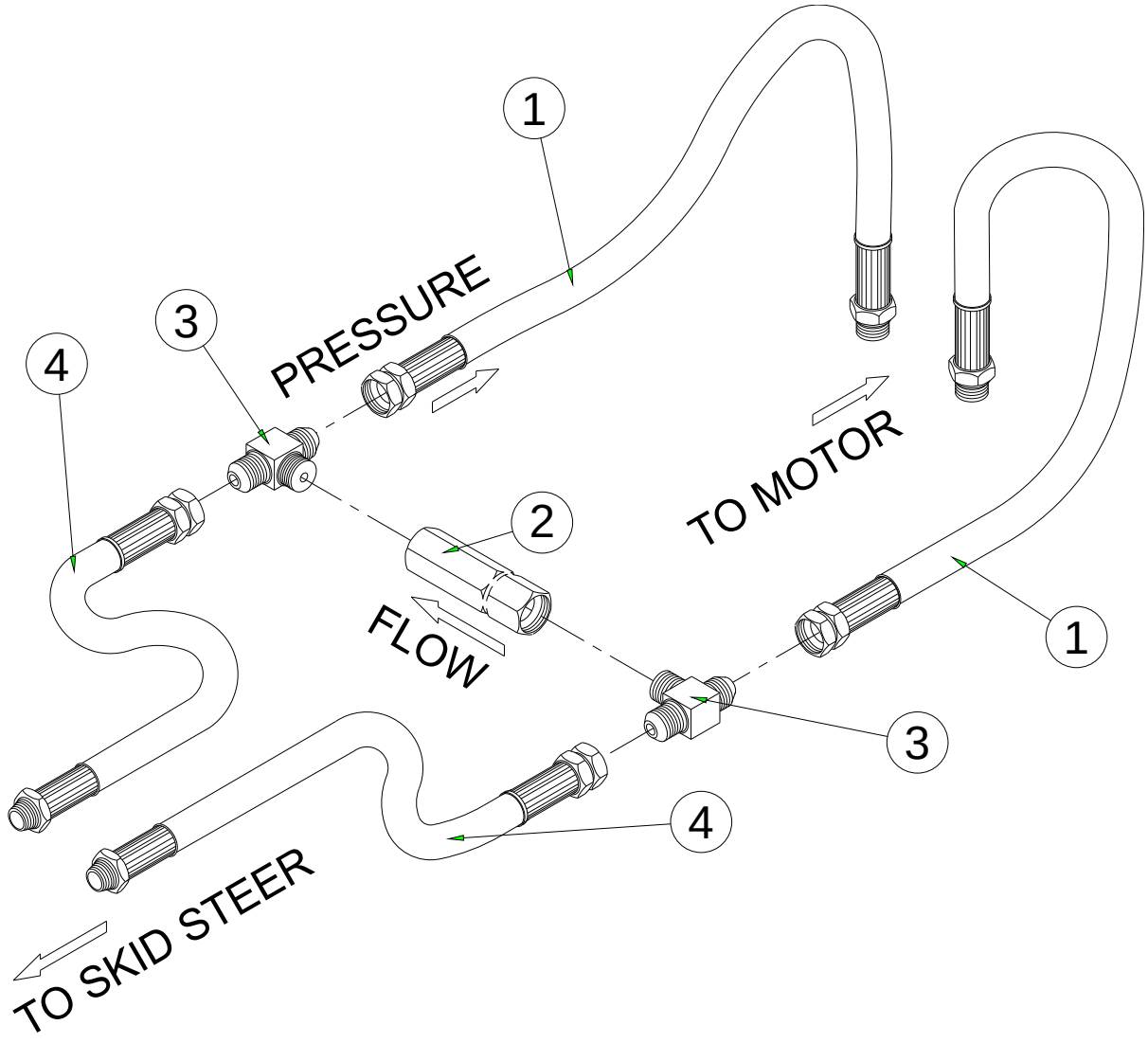

Ref.	Part No.	Qty	Description
1	111-232	2	Hose assembly, 15", 5/8" DW
2	133-004	1	Check valve, 7/8-14 ORB
3	108-049	2	Tee, 7/8-14 ORB/JIC
4	111-231	2	Hose assembly, 75", 5/8" DW

© 2005 Alamo Group Inc.

7400-6200-SKID STEER QUICK ATTACH MOUNT

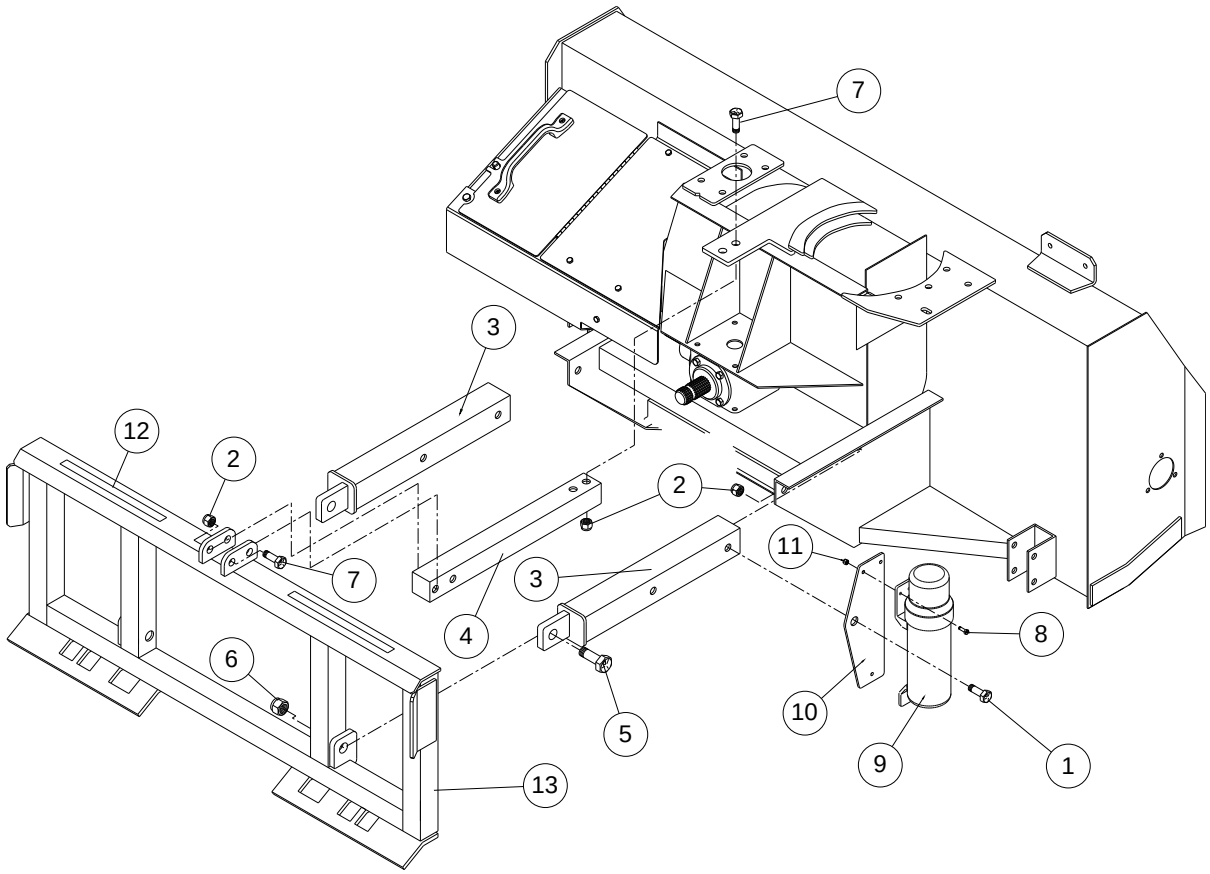

Ref.	Part No.	Qty	Description
1	250-085	6	Bolt, 5/8" x 4" UNC
2	270-004	8	Locknut, 5/8" UNC
3	B601-203	2	Lower mount arm
4	B601-302	1	Top link arm
5	250-120	2	Bolt, 7/8" x 4-1/2" UNC
6	270-006	2	Locknut, 7/8" UNC
7	250-086	2	Bolt, 5/8" x 3-1/2" UNC
8	250-002	3	Bolt, 1/4" x 1" UNC
9	280-201	1	Manual Canister
10	C000-355	1	Mount Plate
11	270-025	3	Locknut, 1/4" UNC
12	213-002	2	Safety Walk Tape, 1" x 18"
13		1	Skid Steer Quick Attachments

© 2005 Alamo Group Inc.

MOUNTING KITS

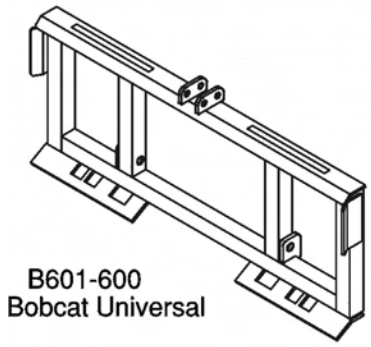
B601-600
Bobcat Universal

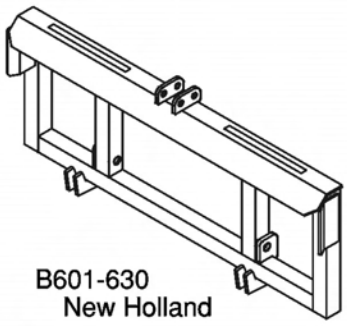
B601-630
New Holland

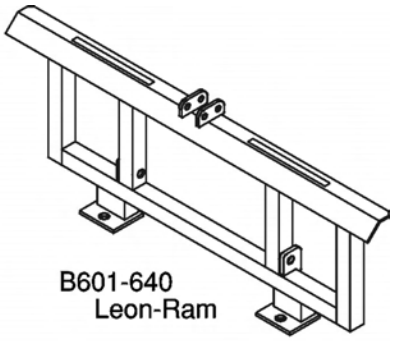
B601-640
Leon-Ram

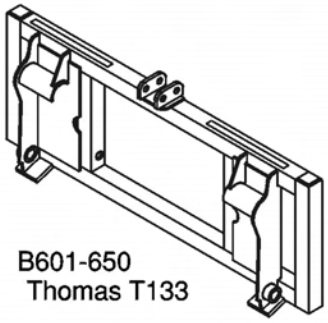
B601-650
Thomas T133

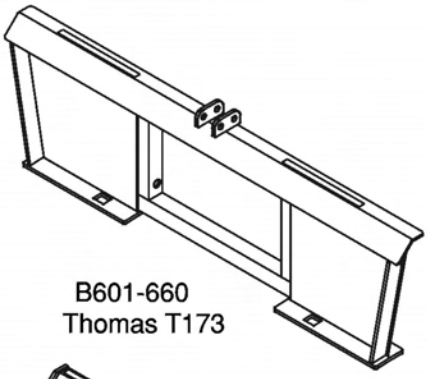
B601-660
Thomas T173

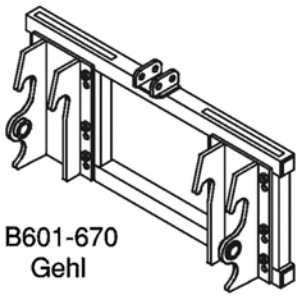
B601-670
Gehl

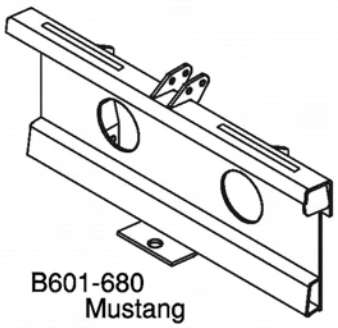
B601-680
Mustang

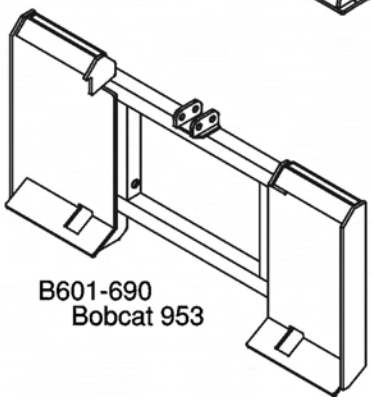
B601-690
Bobcat 953

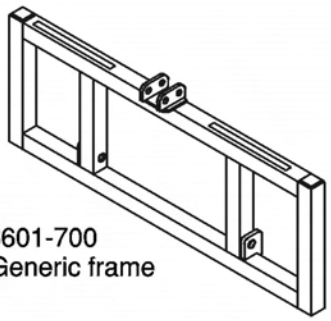
B601-700
Generic frame

Ref.	Part No.	Qty	Description
1	B601-600	1	Bobcat Univeral Quick Mount
	B601-630	1	New Holland Quick Mount
	B601-640	1	Leon-Ram Quick Mount
	B601-650	1	Thomas T133 Quick Mount
	B601-660	1	Thomas T173 Quick Mount
	B601-670	1	Gehl Quick Mount
	B601-680	1	Mustang Quick Mount
	B601-690	1	Bobcat 953 Quick Mount
	B601-700	1	Generic Frame

© 2005 Alamo Group Inc.

7400-6200-MANUAL CHUTE ROTATOR, 543-00

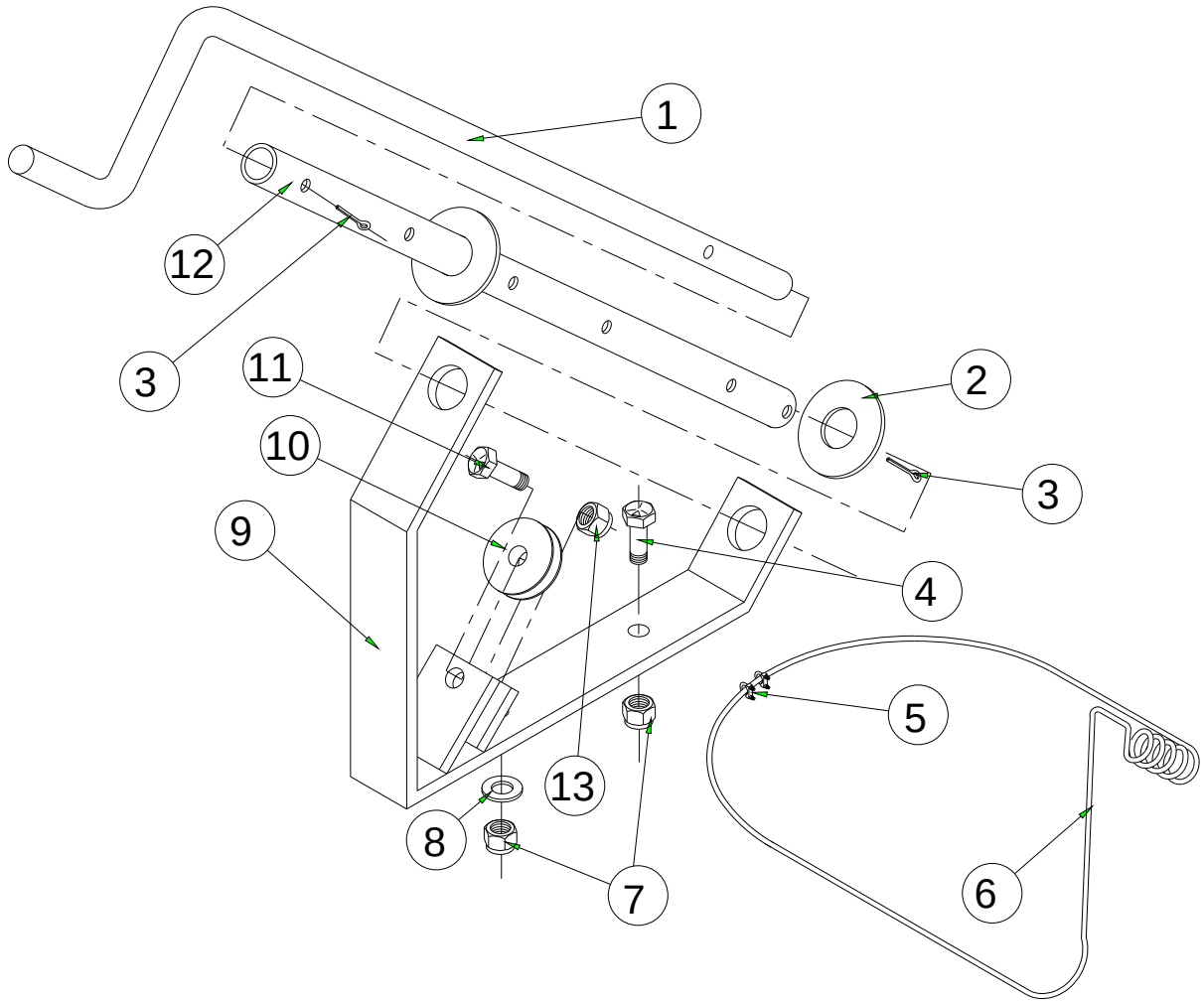

Ref.	Part No.	Qty	Description
1	623-011	1	Crank handle
2	256-001	1	Flat washer, 1-1/16 ID x 2 OD
3	271-004	2	Cotter pin, 5/16 x 2
4	250-059	2	Bolt, 1/2 x 1-1/2 UNC
5	222-003	2	Cable clamp, 1/8
6	220-003	1	Cable assembly, 1/8 x 78
7	270-007	3	Locknut, 1/2 UNC
8	256-011	1	Flat washer,
9	54-03	1	Chute turner stand
10	740-016	1	Pulley wheel
11	250-060	1	Bolt, 1/2 x 1-3/4"
12	37-03	1	Chute turner sleeve
13	270-010	1	Locknut, halfnut, 1/2 UNC

© 2005 Alamo Group Inc.

7400-6200-ELECTRIC CHUTE ROTATOR, 97-20

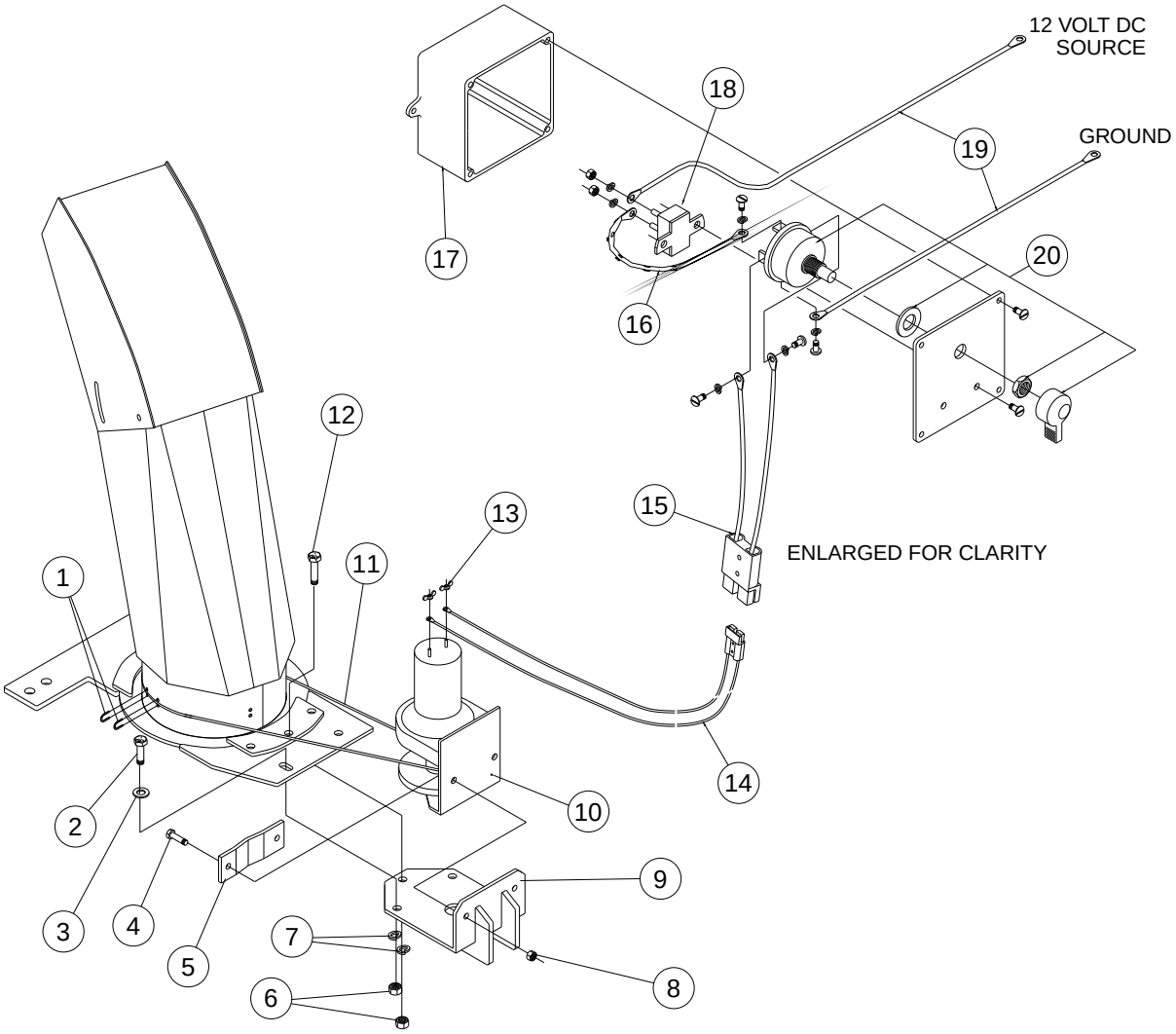

© 2005 Alamo Group Inc.

7400-6200-ELECTRIC CHUTE ROTATOR, 97-20

Ref.	Part No.	Qty	Description
1	222-007	2	Cable clamp, complete 3/16"
2	250-061	2	Bolt, 1/2" x 1-1/4" UNC
3	256-012	1	Flat washer, 1/2"
4	250-019	2	Bolt, 3/8" x 1-1/4" UNC
5	590-554	1	Winch brace
6	257-022	2	Nut, 1/2" UNC
7	255-009	2	Lock washer, 1/2"
8	270-017	2	Locknut, 3/8" UNC
9	97-01	1	Mounting plate, electric winch
10	276-200	1	Electric winch 1000lb
11	221-403	1	Cable, 3/16" dia, 72" long
12	250-059	1	Bolt, 1/2" x 1-1/2" UNC
13	257-108	2	Wing nut, 10-32 UNF
14	97-26	1	Motor harness
15	97-25	1	Switch harness
16	97-24	1	Jumper wire
17	97-22	1	Switch box, c/w hardware
18	275-031	1	Circuit breaker, 30 amp
19	97-23	1	Battery harness
20	276-107	1	Switch, c/w hardware

© 2005 Alamo Group Inc.

7400-6200-HYDRAULIC CHUTE ROTATOR

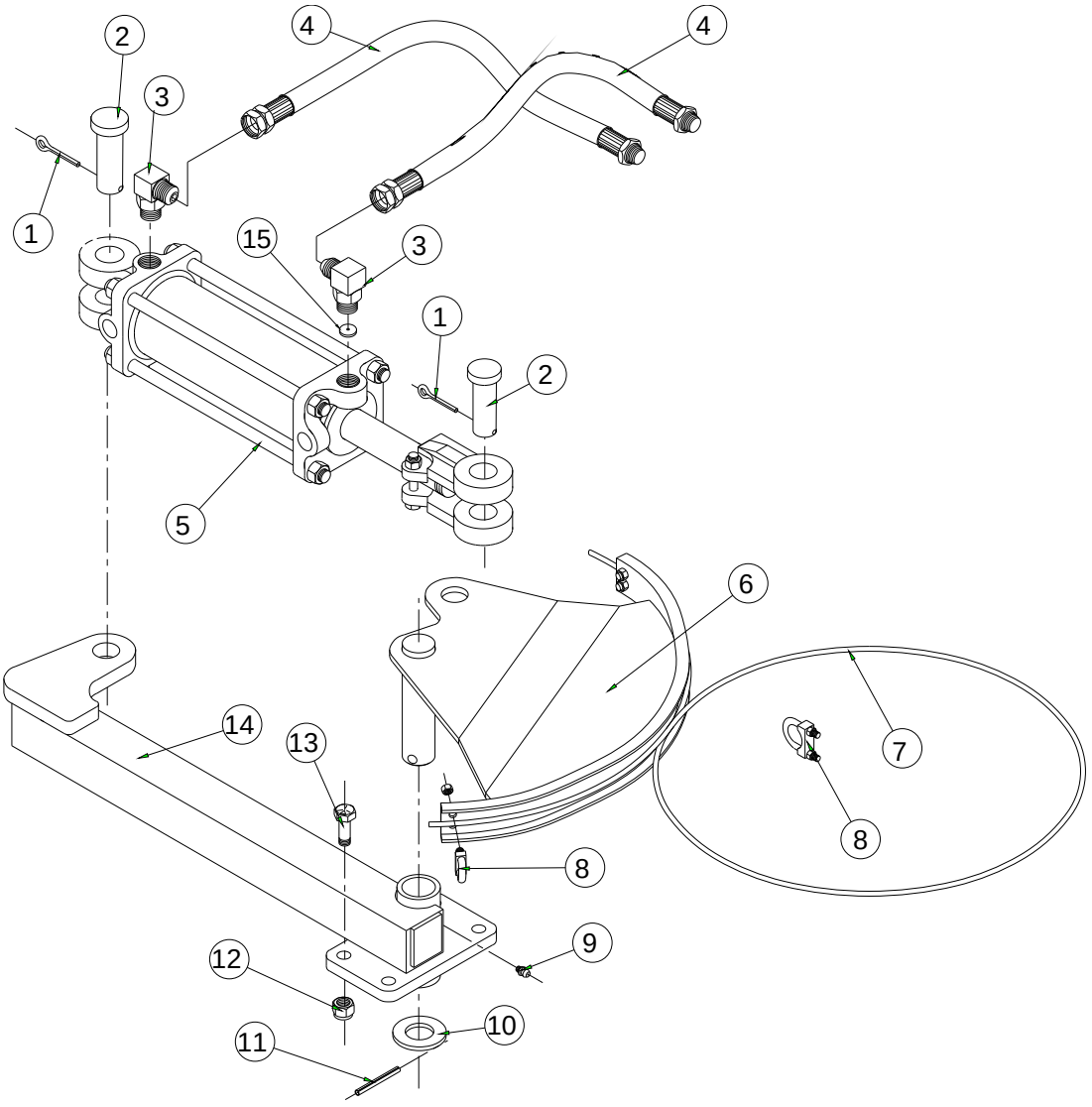

Ref.	Part No.	Qty	Description
1	271-005	2	Cotter pin, 3/16 x 1-1/2
2	302-015	2	Clevis pin, 1 x 2-7/8
3	108-043	2	Elbow, ORB x JIC
4	111-201	2	Hose assembly, 60" 3/8 SW
5	100-2040	1	Cylinder, 2 x 6 Monarch
6	B601-252	1	Cylinder pie
7	221-418	1	Cable assembly, 3/16 x 55-1/2
8	222-007	3	Cable clamp, 3/16 HD complete
9	273-006	1	Grease zerk
10	256-071	1	Machine bush. 1-1/4x1-7/8x10ga
11	262-006	1	Roll pin, 3/8 x 2
12	270-007	4	Locknut, 1/2 UNC
13	250-059	4	Bolt, 1/2 x 1-1/2 UNC
14	B601-251	1	Cylinder mount bracket
15	108-0071	1	Brass restrictor

© 2005 Alamo Group Inc.

HYDRAULIC CYLINDER, 100-2040

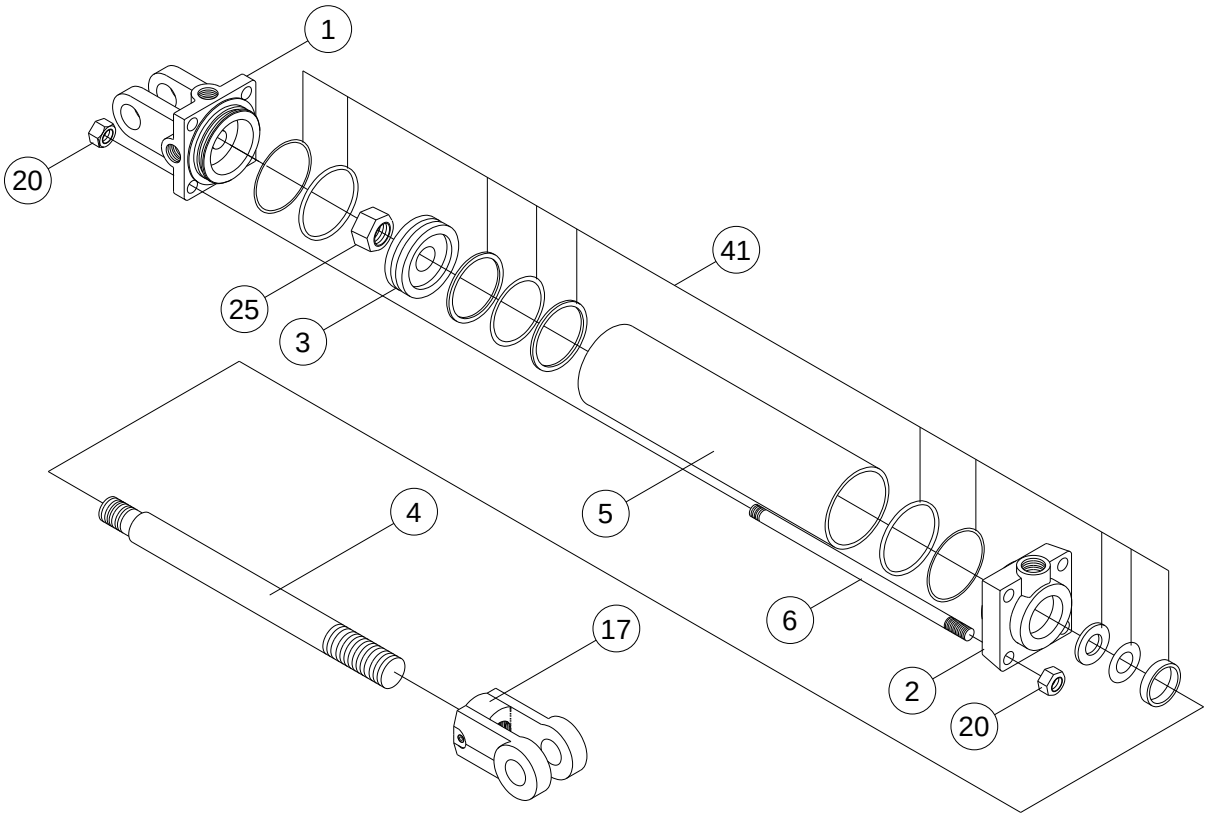

Ref.	Part No.	Qty	Description
1	101-119	1	Clevis cap
2	101-117	1	Rod cap
3	101-118	1	Piston
4	101-120	1	Rod
5	101-116	1	Cylinder tube
6	101-121	4	Tie rod
17	101-202	1	Rod clevis
20	257-022	8	Nut
25	101-122	1	Piston nut
41	101-115	1	Seal kit

© 2005 Alamo Group Inc.

GEARBOX, 330-410

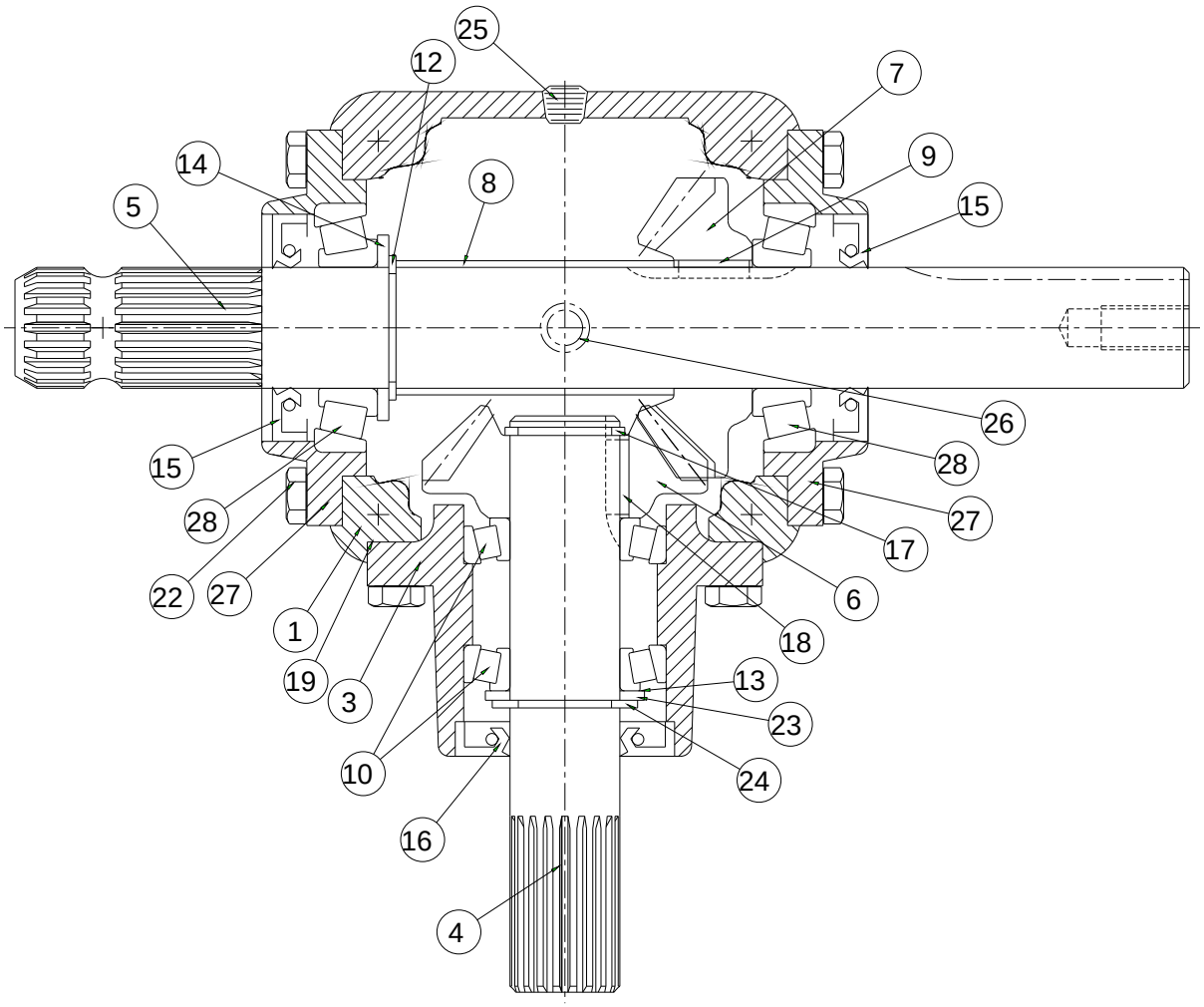

© 2005 Alamo Group Inc.

GEARBOX, 330-410

Ref.	Part No.	Qty	Description
1	331-4101	1	Case, open center
3	331-4102	1	Quill
4	331-4103	1	Quill shaft
5	331-4104	1	Thru shaft
6	331-4105	1	Gear, 1-1/4 bore
7	331-4106	1	Gear, 1-3/8 bore
8	331-4107	1	Spacer
9	331-4108	1	Key, 5/16 x 5/16 x 7/8
10	331-4109	2	Bearing assembly complete
12	331-4110	1	Snap ring
13	331-4111	1	Shim kit, 1.25 x .007
14	331-4112	1	Washer
15	331-4113	2	Seal
16	331-4114	1	Seal
17	331-4115	1	Snap ring, 1-1/4
18	331-4116	1	Key, 1/4 x 1/4 x 7/8
19	331-4117	1	Shim kit
22	250-006	16	Bolt, 5/16 x 3/4, UNC
23	331-4118	1	Washer
24	331-4119	1	Snap ring
25	331-4120	2	Pipe plug, 1/4 NPT
26	331-4121	1	T vent, 1/4 NPT
27	331-4122	2	Bearing cap
28	207-015	2	Bearing cone
	207-016	2	Bearing cup

© 2005 Alamo Group Inc.

DRIVELINE, 340-4800

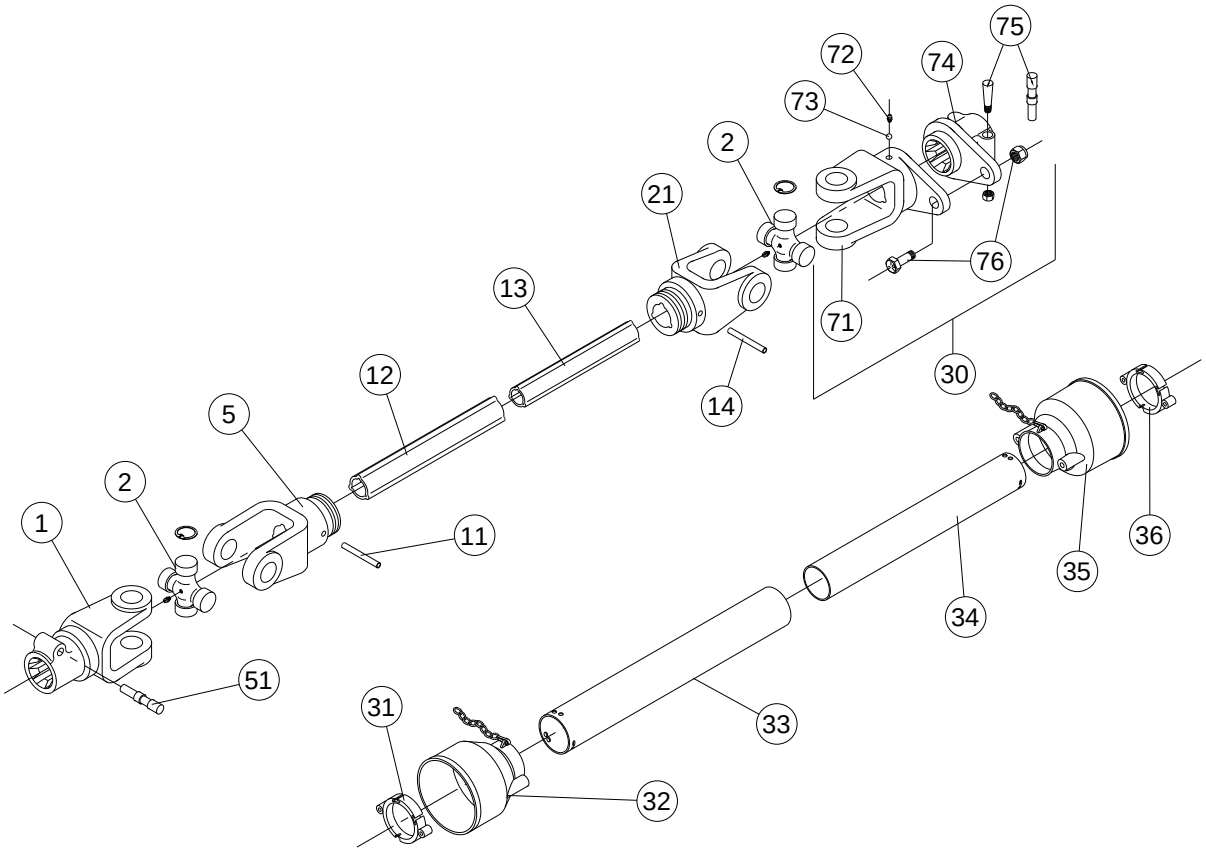

© 2005 Alamo Group Inc.

DRIVELINE, 340-4800

Ref.	Part No.	Qty	Description
1	341-4004	1	Yoke, 1-3/8 Z6
2	341-672	2	Cross kit
5	341-687	1	Yoke, outer tube
11	341-679	1	Flexible pin
12	341-4801	1	Outer tube
13	341-4802	1	Inner tube
14	341-683	1	Flexible pin
21	341-682	1	Yoke, inner tube
30	341-4806	1	Complete shear yoke assy
31	341-3803	1	Outer bearing
32	341-3804	1	Outer cone set & tube
35	341-3807	1	Inner cone set & tube
36	341-3808	1	Inner bearing
51	341-0401	1	Push pin kit
71	341-0416	1	Shear yoke
72	341-707	1	Grease zerk
73	341-708	1	Ball
74	341-4805	1	Shear plate
75	341-801	1	Tapered Pin & Nut
	341-709	1	Spring Type Push Pin Kit
76	341-0420	1	Shear pin & nut
91	341-4803	1	U-joint half female, tractor end
92	341-4804	1	U-joint half male, implement end
97	340-4800	1	Complete Driveline, Binacchi Size 4

© 2005 Alamo Group Inc.

PART INDEX

100-2040.....19
101-115.....20
101-116.....20
101-117.....20
101-118.....20
101-119.....20
101-120.....20
101-121.....20
101-122.....20
101-202.....20
108-0071.....19
108-043.....19
108-049.....13
111-201.....19
111-231.....13
111-232.....13
116-213.....12
116-214.....12
116-902.....12
116-903.....12
116-904.....12
117-975.....12
133-004.....13
207-015.....22
207-016.....22
213-002.....14
220-003.....16
221-403.....18
221-418.....19
222-003.....16
222-007.....18–19
229-010.....10
250-002.....10, 14
250-006.....4, 22
250-017.....4
250-018.....2, 4, 8, 10, 12
250-019.....2, 18
250-030.....2, 6
250-040.....2
250-0501.....4
250-059.....2, 12, 16, 18–19
250-060.....12, 16
250-061.....2, 18
250-084.....6
250-085.....10, 14
250-086.....14
250-095.....6, 10
250-120.....14
250-136.....6
251-151.....4
255-009.....2, 18
255-013.....4, 8, 10, 12
256-001.....16
256-006.....6, 10, 12
256-011.....12, 16
256-012.....18
256-017.....4, 8, 12
256-020.....4
256-062.....2
256-063.....12
256-071.....19
257-022.....18, 20
257-108.....18
257-111.....4
262-006.....19
268-017.....12
270-004.....6, 10, 14
270-006.....14
270-007.....2, 4, 12, 16, 19
270-010.....16
270-014.....2
270-017.....2, 4, 6, 8, 10, 18
270-020.....4
270-025.....6, 10, 14
271-004.....16
271-005.....19
271-008.....10
273-006.....6, 19
275-031.....18
276-107.....18
276-200.....18
28-07.....8
280-150.....4
280-201.....10, 14
300-001.....10
300-010.....10
300-0120.....4
300-015.....10
302-015.....19
310-502.....6
310-541.....12
311-501.....6
311-502.....6
311-541.....12
312-504.....12
312-506.....12
312-509.....2
313-051.....6
330-410.....4, 6
331-4101.....22
331-4102.....22
331-4103.....22
331-4104.....22
331-4105.....22

© 2005 Alamo Group Inc.

PART INDEX

331-4106.....22
331-4107.....22
331-4108.....22
331-4109.....22
331-4110.....22
331-4111.....22
331-4112.....22
331-4113.....22
331-4114.....22
331-4115.....22
331-4116.....22
331-4117.....22
331-4118.....22
331-4119.....22
331-4120.....22
331-4121.....22
331-4122.....22
340-3800.....10
340-4800.....10, 24
341-0401.....24
341-0416.....24
341-0420.....24
341-3803.....24
341-3804.....24
341-3807.....24
341-3808.....24
341-4004.....24
341-4801.....24
341-4802.....24
341-4803.....24
341-4804.....24
341-4805.....24
341-4806.....24
341-672.....24
341-679.....24
341-682.....24
341-683.....24
341-687.....24
341-707.....24
341-708.....24
341-709.....24
341-801.....24
352-600.....2, 6
353-601.....2, 6
363-005.....6
37-03.....16
53-07.....4
54-03.....16
57-10.....8
57-12.....8
590-122.....2
590-554.....18
623-011.....16
740-016.....16
904-011.....2
97-01.....18
97-22.....18
97-23.....18
97-24.....18
97-25.....18
97-26.....18
B501-101.....2, 4
B501-105.....2
B501-109.....2
B501-115.....10
B501-118.....6
B501-119.....4
B501-120.....4
B601-101.....2, 4
B601-105.....2
B601-109.....2
B601-115.....2
B601-118.....6
B601-120.....2
B601-122.....6
B601-123.....6
B601-125.....10
B601-126.....4, 6
B601-127.....4
B601-128.....4
B601-201.....10
B601-202.....10
B601-203.....10, 14
B601-251.....19
B601-252.....19
B601-301.....12
B601-302.....14
B601-304.....12
B601-600.....15
B601-630.....15
B601-640.....15
B601-650.....15
B601-660.....15
B601-670.....15
B601-680.....15
B601-690.....15
B601-700.....15
C000-355.....10, 14

© 2005 Alamo Group Inc.

NESSA

www.nessainc.com

73747 130TH ST
ZEARING IA 50276
641-487-7608
INFO@NESSAINC.COM
WWW.NESSAINC.COM

7400
Printed in Canada
B601-010P